THERMA-TRU® DOORS

Profiles™ & Traditions

WOOD EDGE GLAZED STEEL DOUBLE DOOR w/ or w/out SIDELITES

INSWING/OUTSWING "NON-IMPACT"

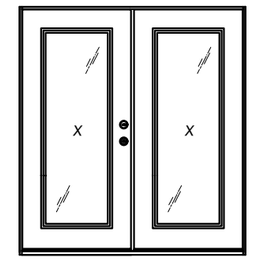

XX

L F Schmidt

L. F. SCHMIDT LICENSE No. 43409 STATE OF FLORIDA PROFESSIONAL ENGINEER

Digitally signed by Lyndon F Schmidt
Date: 2023.08.07 14:02:53 -04'00'

This item has been digitally signed and sealed by **L. F. Schmidt, P.E.** on the date adjacent to the seal.

Printed copies of this document are not considered signed and sealed and the signature must be verified on any electronic copies.

THIS PRODUCT APPROVAL IS VALID ONLY FOR THE STATE OF FLORIDA

GENERAL NOTES

1. This product has been evaluated and is in compliance with the 8th Edition (2023) Florida Building Code (FBC) structural requirements excluding the "High Velocity Hurricane Zone" (HVHZ).
2. Product anchors shall be as listed and spaced as shown on details. Anchor embedment to base material shall be beyond wall dressing or stucco.
3. When used in areas requiring wind borne debris protection, this product is required to be protected with an impact resistant covering that complies with FBC Sections 1609.1.2 & R301.2.1.2.
4. For 2x stud framing construction, anchoring of these units shall be the same as that shown for 2x buck masonry construction.
5. Site conditions that deviate from the details of this drawing require further engineering analysis by a licensed engineer or registered architect.

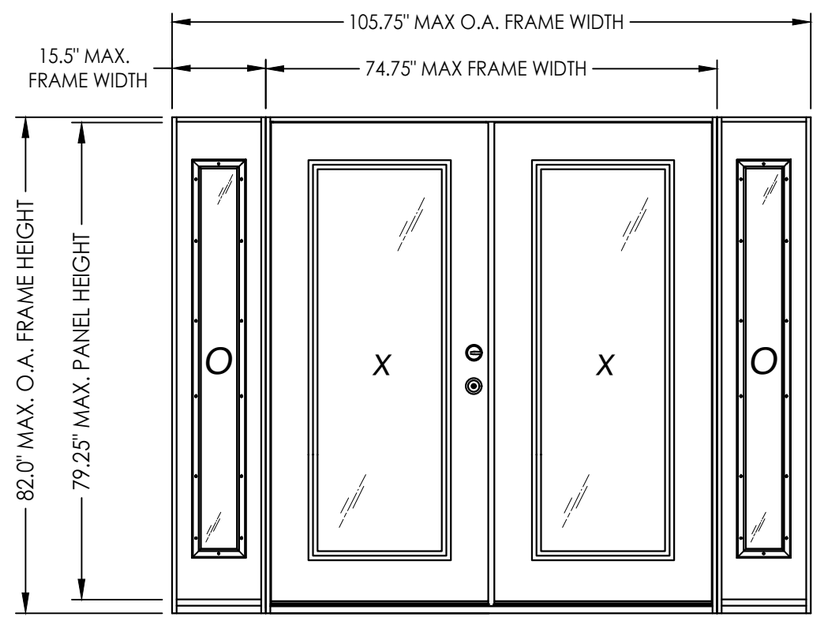

CONFIGURATION	DESIGN PRESSURE (PSF) INSWING		DESIGN PRESSURE (PSF) OUTSWING	
	POSITIVE	NEGATIVE	POSITIVE	NEGATIVE
XX, OXXO	+45.0	-50.0	+45.0	-45.0

TABLE OF CONTENTS

SHEET #	DESCRIPTION
1	Typical Elevations, Design Pressures & General Notes
2	Door Panel Details "Profiles"
3	Door Panel Details "Traditions"
4	Sidelite Panel and Glazing Details
5	Elevations
6	Horizontal & Vertical Cross Sections (2X Buck)
7	Horizontal & Vertical Cross Sections (1X Buck)
8	Horizontal & Vertical Cross Sections (Direct to Masonry)
9	Vertical Cross Sections (Thresholds)
10	Buck Anchoring
11	Frame Anchoring
12	Hardware Details
13	Components
14	Bill of Materials

Documents Prepared By:
Lyndon F. Schmidt
P.E. No. 43409

R.W. BUILDING CONSULTANTS, INC.
P.O. Box 230, Valrico, FL 33595
Phone No.: 813.659.9197
FBPE Registry No. 9813

PRODUCT: THERMA-TRU STEEL DOOR

PART OR ASSEMBLY: TYPICAL ELEVATION, DESIGN PRESSURES & GENERAL NOTES

NO.	DATE	REVISIONS	BY
2	8/07/23	UPDATE TO 8TH ED. (2023) FBC	LFS
1	7/14/20	UPDATE TO 7TH ED (2020) FBC	LFS

DATE: 10/12/17
SCALE: N.T.S.
DWG. BY: JK
CHK. BY: LFS
DRAWING NO.: FL-21131.9
SHEET 1 OF 14

© 2017 R.W. Building Consultants Inc.

Z:\2023 FBC Drawings\Therma-Tru\FL-21131 R2\FL-21131.7-9.dwg

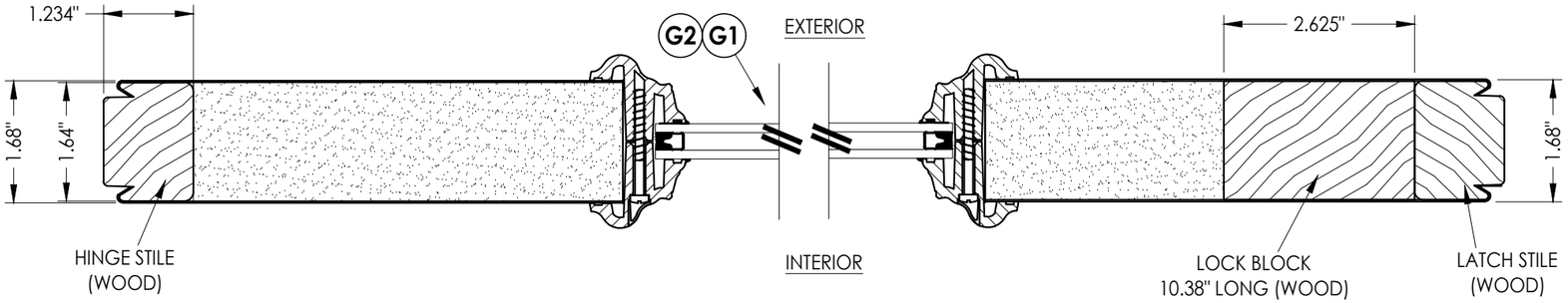

1/2 **HORIZONTAL CROSS SECTION**

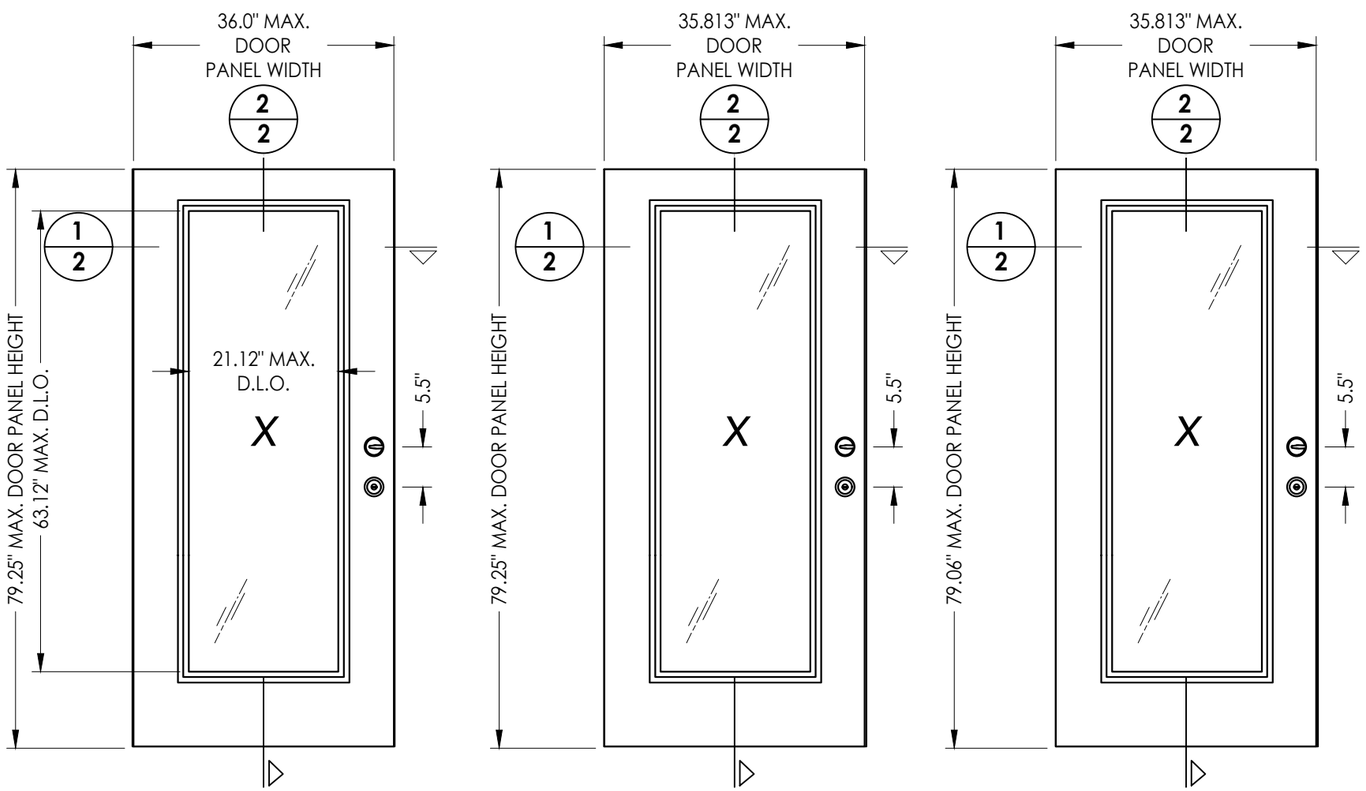

40 **DOOR PANEL**
BOOK

41 **DOOR PANEL**
Hybrid Door

42 **DOOR PANEL**
U1 Door

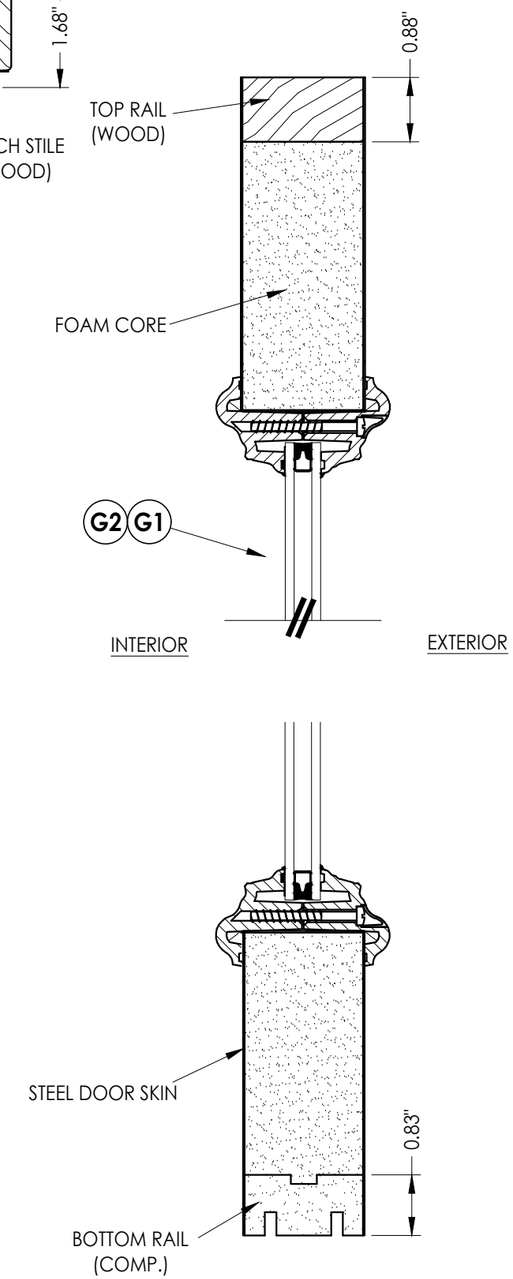

2/2 **VERTICAL CROSS SECTION**

"PROFILES" SERIES DOOR PANEL

STEEL DOOR SKIN: 24 GA. (0.022" MIN. THICKNESS, Fy = 48,470 PSI MIN.)
FOAM CORE: POLYURETHANE FOAM (1.9 PCF MIN.)

Documents Prepared By:
Lyndon F. Schmidt
P.E. No. 43409
RW BUILDING CONSULTANTS, INC.
P.O. Box 230, Valrico, FL 33595
Phone No.: 813.659.9197
FBPE Registry No. 9813

PRODUCT: THERMA-TRU STEEL DOOR

PART OR ASSEMBLY: "PROFILES" DOOR PANEL DETAILS

NO.	DATE		BY
2	8/07/23	UPDATE TO 8TH ED. (2023) FBC	LFS
1	7/14/20	UPDATE TO 7TH ED (2020) FBC	LFS

REVISIONS

DATE: 10/12/17
SCALE: N.T.S.
DWG. BY: JK
CHK. BY: LFS
DRAWING NO.: FL-21131.9
SHEET 2 OF 14

© 2017 R.W. BUILDING CONSULTANTS INC.

Z:\2023 FBC Drawings\Therma-Tru\FL-21131 R2\FL-21131.7-9.dwg

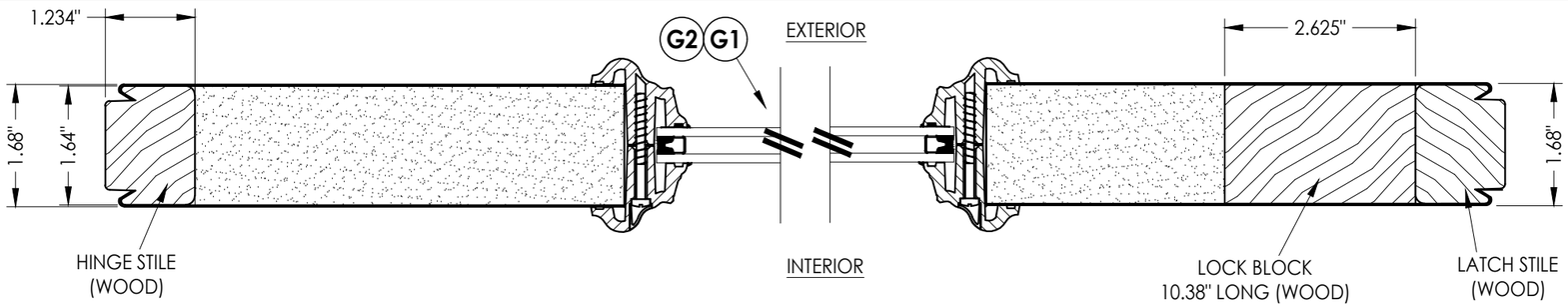

1/3 **HORIZONTAL CROSS SECTION**

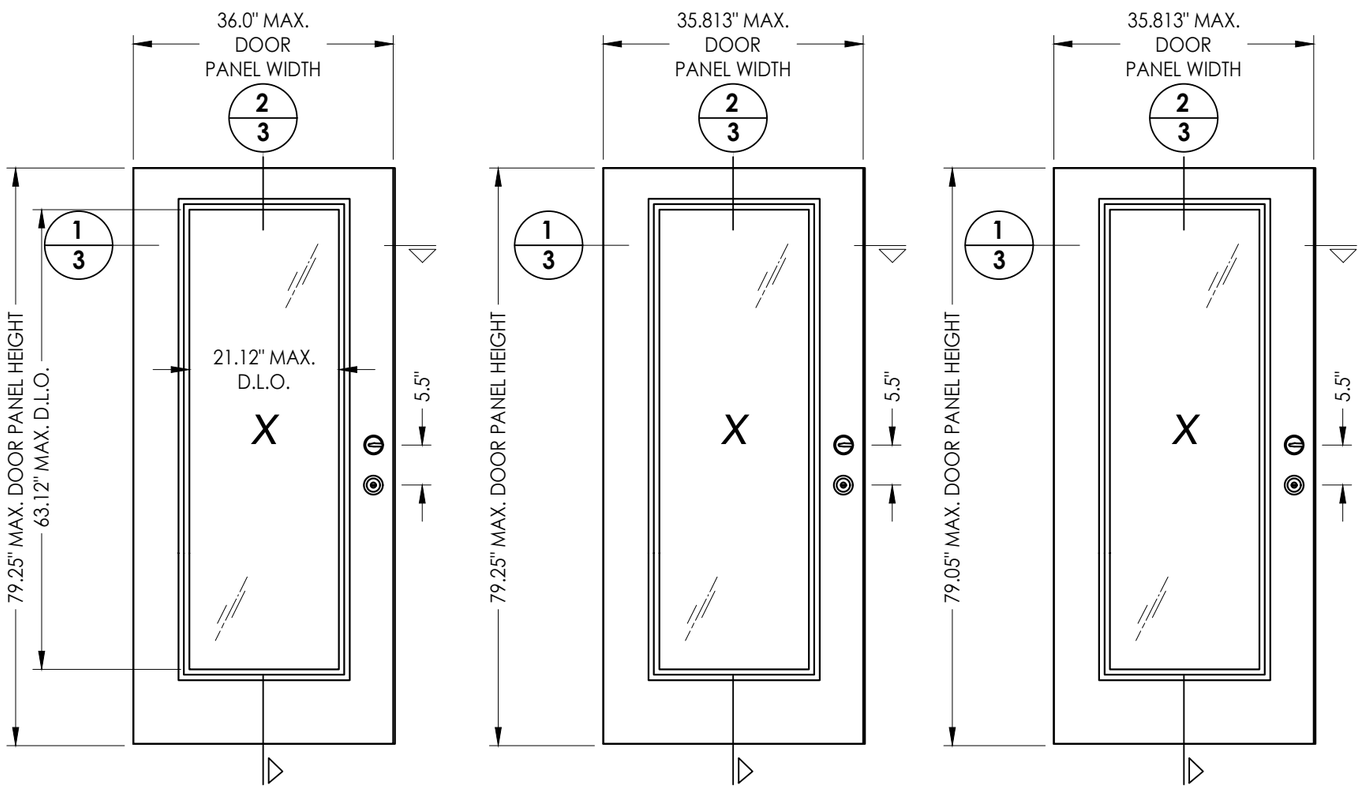

60 **DOOR PANEL** BOOK

61 **DOOR PANEL** Hybrid Door

62 **DOOR PANEL** U1 Door

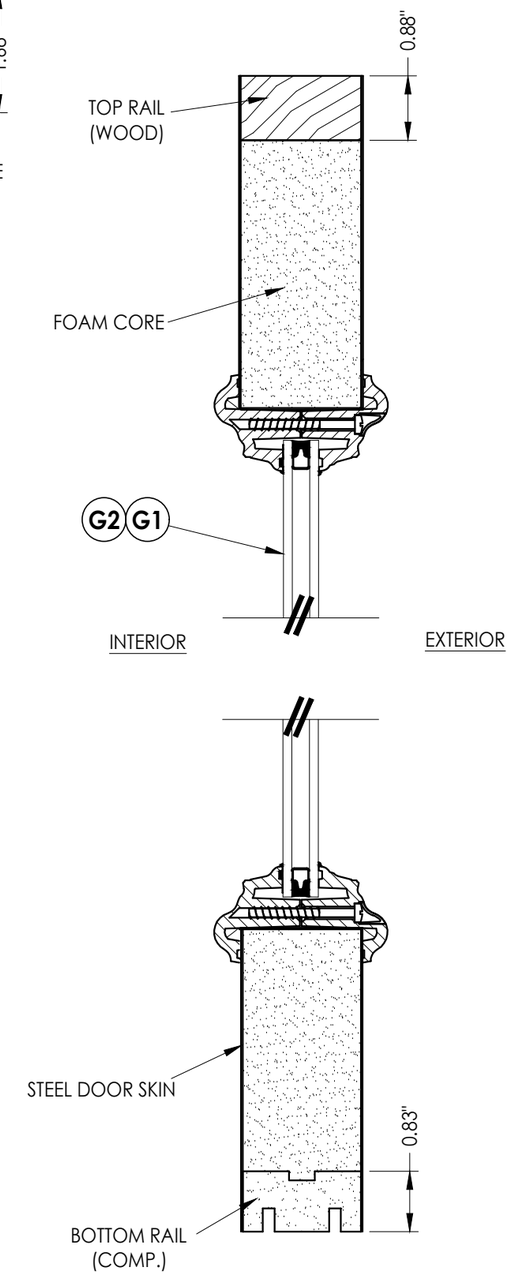

2/3 **VERTICAL CROSS SECTION**

"TRADITIONS" SERIES DOOR PANEL

STEEL DOOR SKIN: 25 GA. (0.018" MIN. THICKNESS, Fy = 27,830 PSI MIN.)
FOAM CORE: POLYURETHANE FOAM (1.9 PCF MIN.)

Documents Prepared By:
Lyndon F. Schmidt
P.E. No. 43409

RW BUILDING CONSULTANTS, INC.
P.O. Box 230, Valrico, FL 33595
Phone No.: 813.659.9197
FBPE Registry No. 9813

PRODUCT: THERMA-TRU STEEL DOOR

PART OR ASSEMBLY: "TRADITIONS" DOOR PANEL DETAILS

NO.	DATE		BY
2	8/07/23	UPDATE TO 8TH ED. (2023) FBC	LFS
1	7/14/20	UPDATE TO 7TH ED (2020) FBC	LFS

REVISIONS

DATE: 10/12/17
SCALE: N.T.S.
DWG. BY: JK
CHK. BY: LFS
DRAWING NO.: FL-21131.9
SHEET 3 OF 14

© 2017 R.W. BUILDING CONSULTANTS INC.

Z:\2023 FBC Drawings\Therma-Tru\FL-21131 R2\FL-21131.7-9.dwg

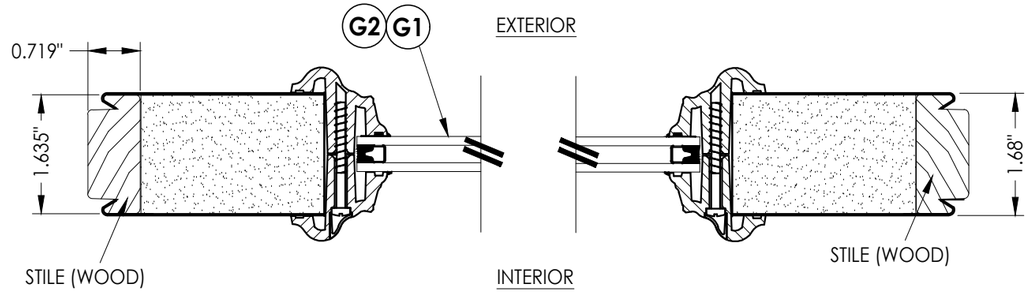

1/4 **HORIZONTAL CROSS SECTION**

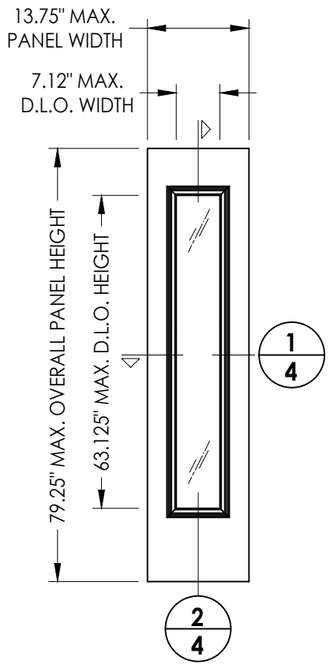

50 **SIDELITE PANEL**

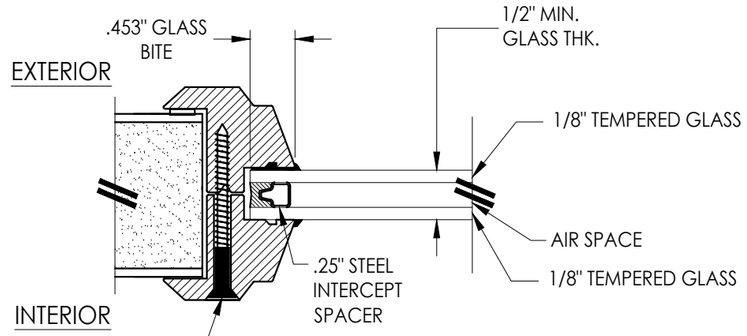

G1 **GLAZING DETAIL**
.5 insulated glass w/
pvc lite frame

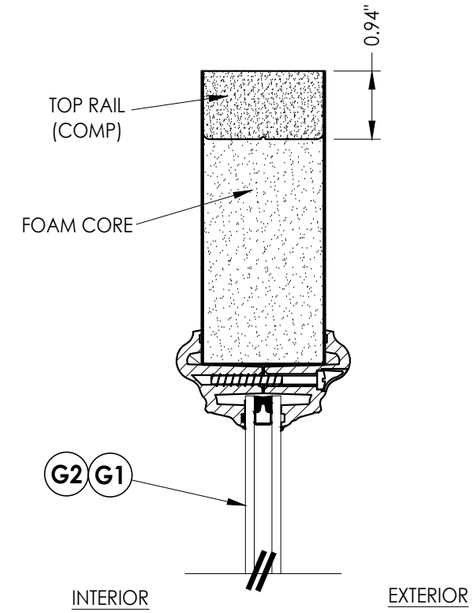

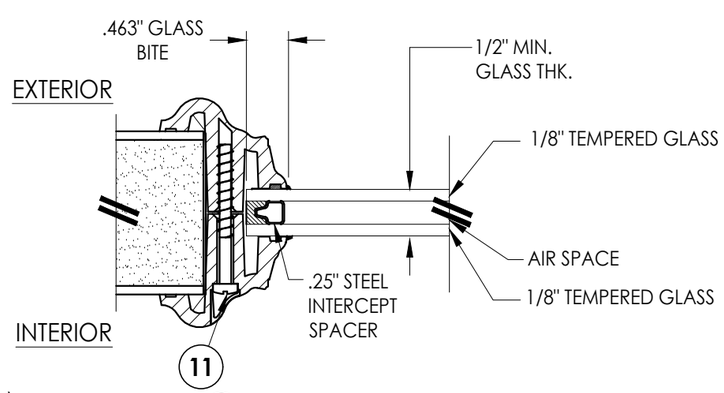

G1 **GLAZING DETAIL**
.5 insulated glass w/
bts lite frame

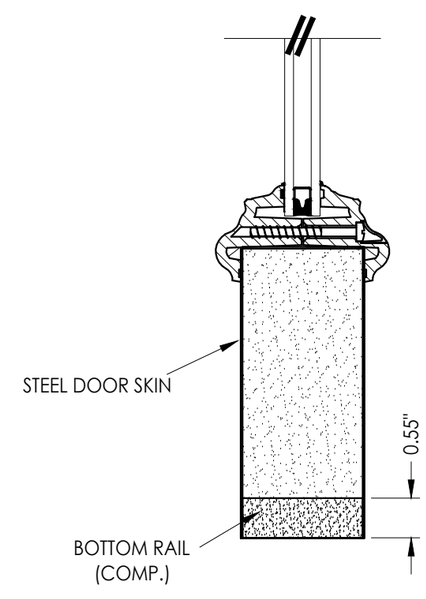

2/4 **VERTICAL CROSS SECTION**

NOTE:
1. Spacing for item #11 & #12 (lite frame screws) is as follows: From the top down on sides; 3", 14.75", 26.5", 38.25", 50.5" & 62.25". There are (2) screws both top and bottom at 4.25" in from each corner.

SIDELITE PANEL

STEEL SKIN "PROFILES": 24 GA. (0.022" MIN. THICKNESS, Fy = 48,470 PSI MIN.)
STEEL SKIN "TRADITIONS": 25 GA. (0.018" MIN. THICKNESS, Fy = 27,830 PSI MIN.)
FOAM CORE: POLYURETHANE FOAM (1.9 PCF MIN.)
SIDELITE WOOD COMPONENTS: PINE (SG >= 0.42)

Documents Prepared By:
Lyndon F. Schmidt
P.E. No. 43409
R.W. BUILDING CONSULTANTS, INC.
P.O. Box 230, Valrico, FL 33595
Phone No.: 813.659.9197
FBPE Registry No. 9813

PRODUCT: THERMA-TRU STEEL DOOR

PART OR ASSEMBLY: SIDELITE PANEL / GLAZING DETAILS

NO.	DATE	REVISIONS	BY
2	8/07/23	UPDATE TO 8TH ED. (2023) FBC	LFS
1	7/14/20	UPDATE TO 7TH ED (2020) FBC	LFS

DATE: 10/12/17
SCALE: N.T.S.
DWG. BY: JK
CHK. BY: LFS
DRAWING NO.: FL-21131.9
SHEET 4 OF 14

© 2008 R.W. Building Consultants Inc.

Z:\2023 FBC Drawings\Therma-Tru\FL-21131 R2\FL-21131.7-9.dwg

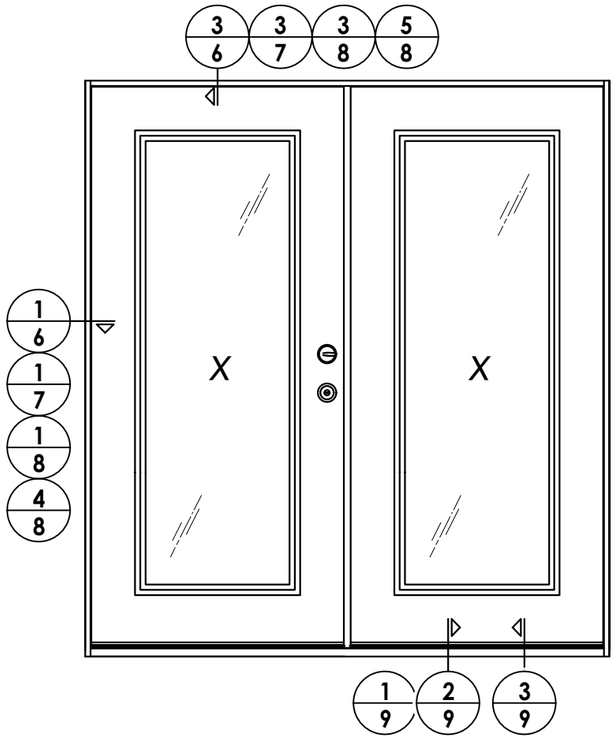

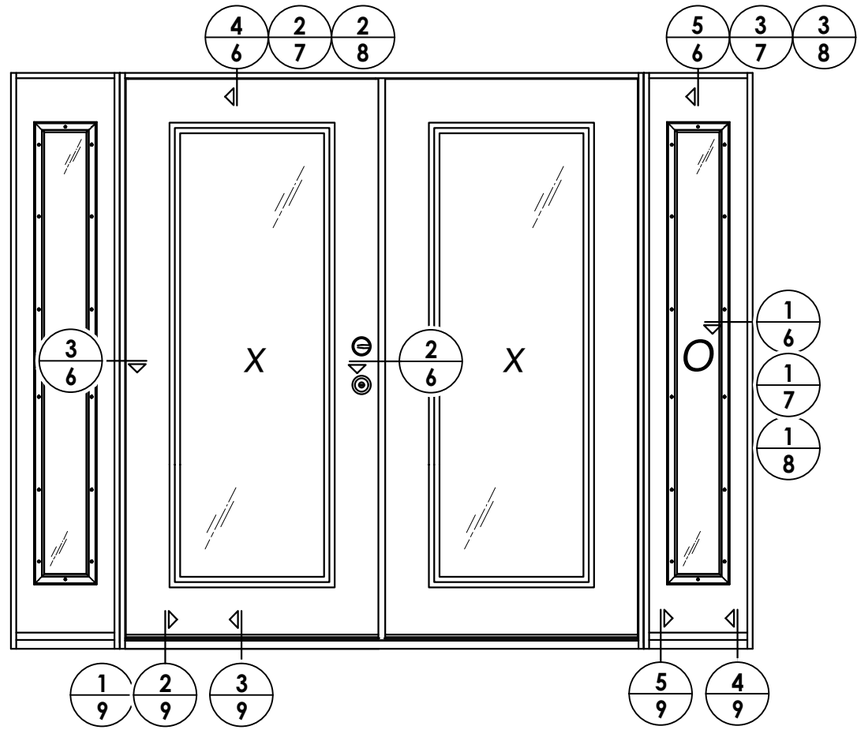

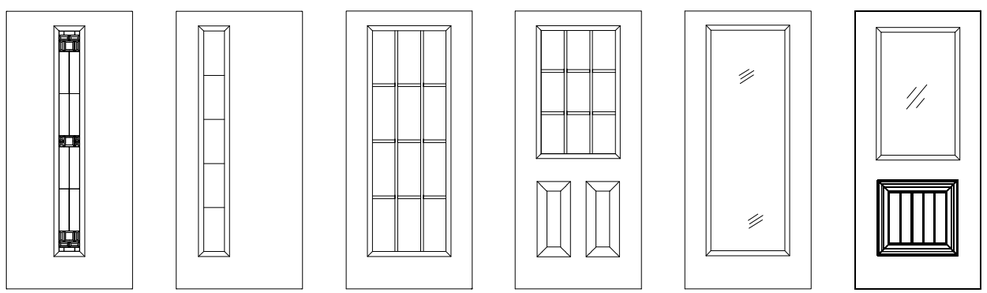

PROFILES/TRADITIONS Steel Door Panel Options

Panel options shown are for illustration and are representative only
(similar opaque panel configurations are allowed)

HARDWARE TABLE		
MANUFACTURER	***MODEL***	
SCHLAGE	**KNOB:** **DEADBOLT:**	**F51** **B60**
KWIKSET	**KNOB:** **DEADBOLT:**	**SIGNATURE SERIES** **SIGNATURE SERIES (980)**

Documents Prepared By:
Lyndon F. Schmidt
P.E. No. 43409

RW BUILDING CONSULTANTS, INC.
P.O. Box 230, Valrico, FL 33595
Phone No.: 813.659.9197
FBPE Registry No. 9813

PRODUCT: THERMA-TRU STEEL DOOR

PART OR ASSEMBLY: ELEVATIONS

REVISIONS

NO.	DATE		BY
2	8/07/23	UPDATE TO 8TH ED. (2023) FBC	LFS
1	7/14/20	UPDATE TO 7TH ED (2020) FBC	LFS

DATE: 10/12/17
SCALE: N.T.S.
DWG. BY: JK
CHK. BY: LFS
DRAWING NO.: FL-21131.9
SHEET 5 OF 14

© 2017 R.W. Building Consultants Inc.

Z:\2023 FBC Drawings\Therma-Tru\FL-21131 R2\FL-21131.7-9.dwg

Notes:
1. Sidelite assembly screws located 7" from top and 14" from bottom & 2 more screws equally spaced between (4 screws total per side jamb).
2. Sidelite assembly screws located 3" from each end (2 screws along head jamb).

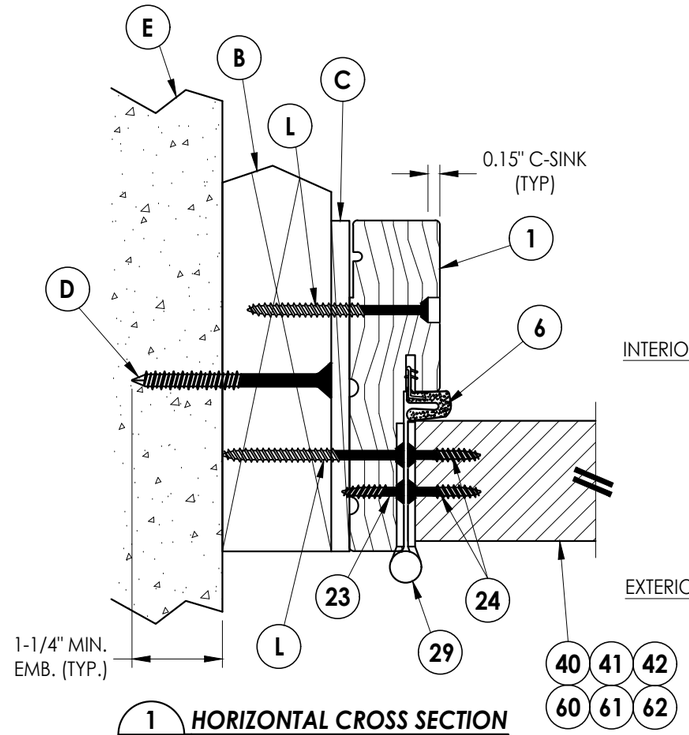

1/6 **HORIZONTAL CROSS SECTION**
Shown w/ 2X Buck
Outswing shown (Inswing similar)

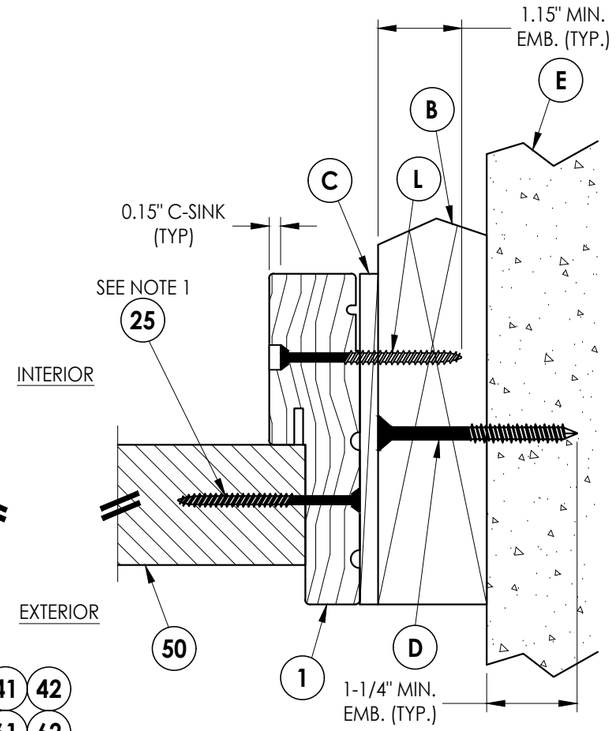

2/6 **HORIZONTAL CROSS SECTION**
Shown w/ 2X Buck
Outswing shown (Inswing similar)

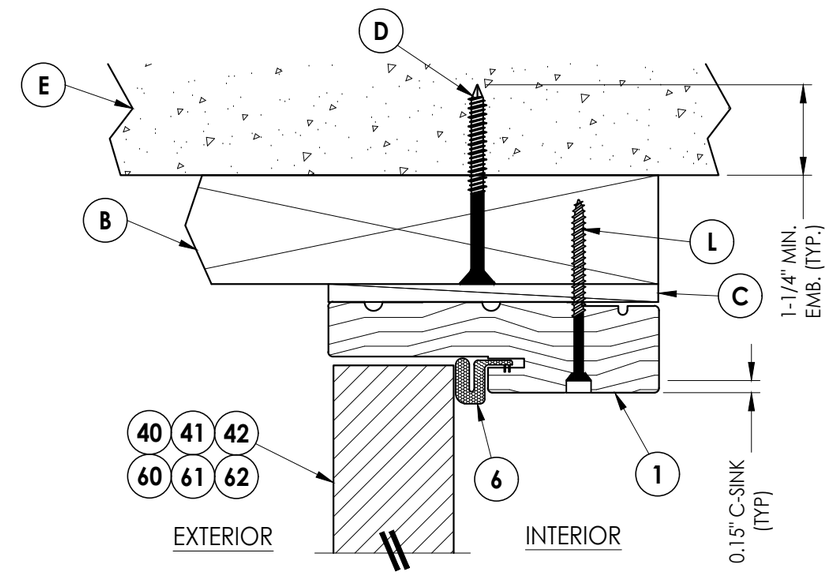

3/6 **VERTICAL CROSS SECTION**
Shown w/ 2X Buck
Outswing shown (Inswing similar)

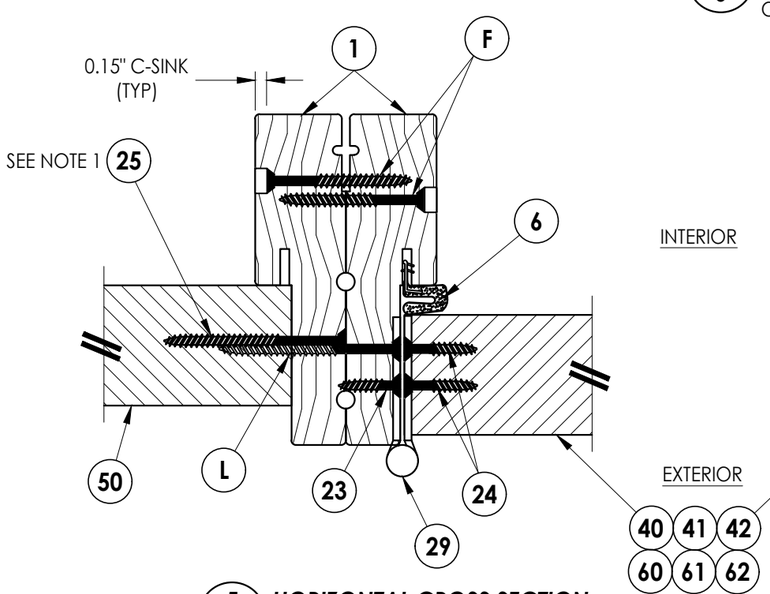

5/6 **HORIZONTAL CROSS SECTION**
Outswing shown (Inswing similar)

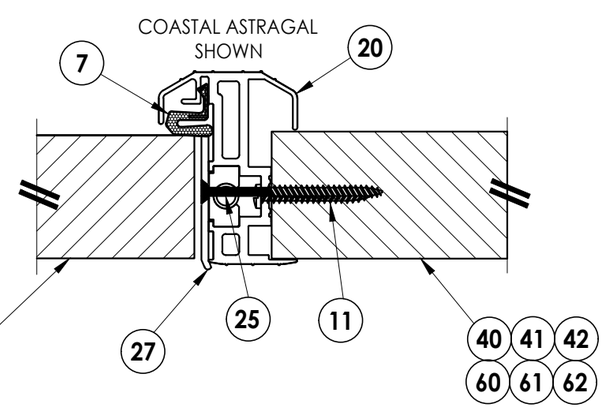

6/6 **HORIZONTAL CROSS SECTION**
Outswing shown (Inswing similar)

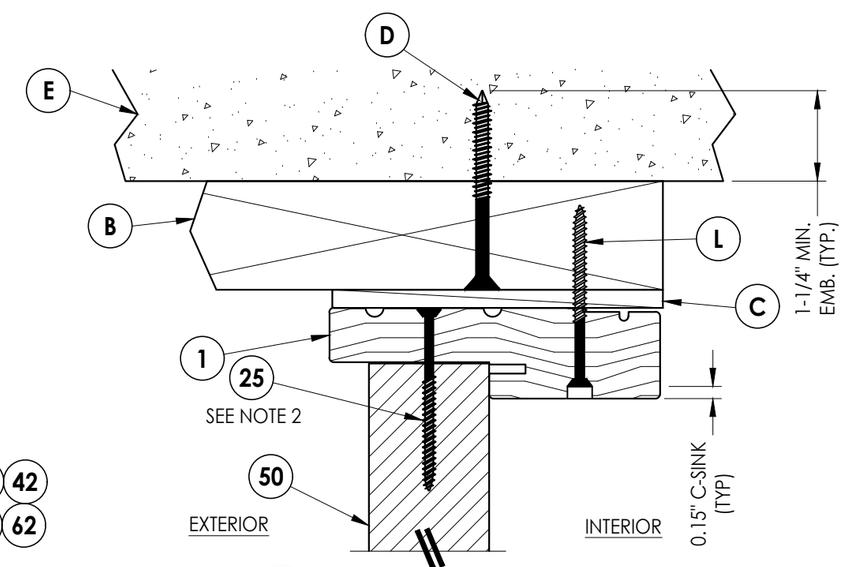

4/6 **VERTICAL CROSS SECTION**
Shown w/ 2X Buck
Outswing shown (Inswing similar)

Documents Prepared By:
Lyndon F. Schmidt
P.E. No. 43409

RW BUILDING CONSULTANTS, INC.
P.O. Box 230, Valrico, FL 33595
Phone No.: 813.659.9197
FBPE Registry No. 9813

PRODUCT: THERMA-TRU STEEL DOOR

PART OR ASSEMBLY: HORIZONTAL & VERTICAL CROSS SECTIONS (2X BUCK)

NO.	DATE	REVISIONS	BY
2	8/07/23	UPDATE TO 8TH ED. (2023) FBC	LFS
1	7/14/20	UPDATE TO 7TH ED (2020) FBC	LFS

DATE: 10/12/17
SCALE: N.T.S.
DWG. BY: JK
CHK. BY: LFS
DRAWING NO.: FL-21131.9
SHEET 6 OF 14

© 2017 R.W. Building Consultants Inc.

Z:\2023 FBC Drawings\Therma-Tru\FL-21131 R2\FL-21131.7-9.dwg

Notes:
1. Sidelite assembly screws located 7" from top and 14" from bottom & 2 more screws equally spaced between (4 screws total per side jamb).
2. Sidelite assembly screws located 3" from each end (2 screws along head jamb).

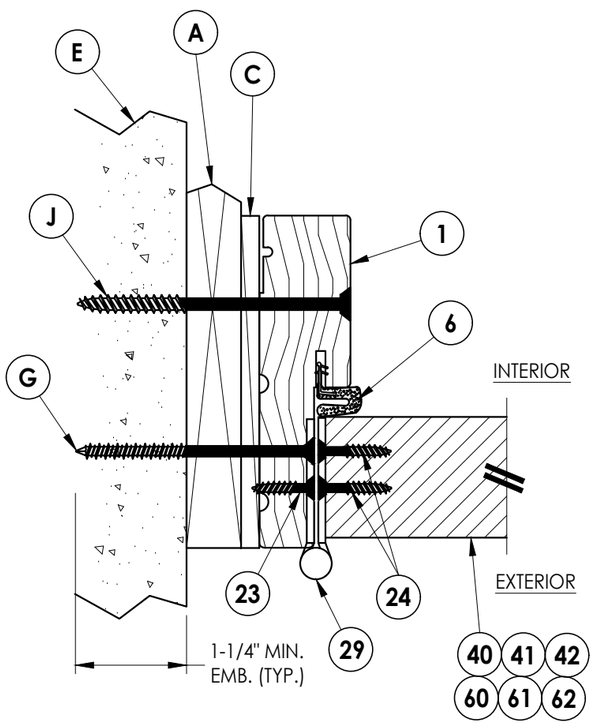

1/7 **HORIZONTAL CROSS SECTION**
Shown w/ 1X sub-buck
Outswing shown (Inswing similar)

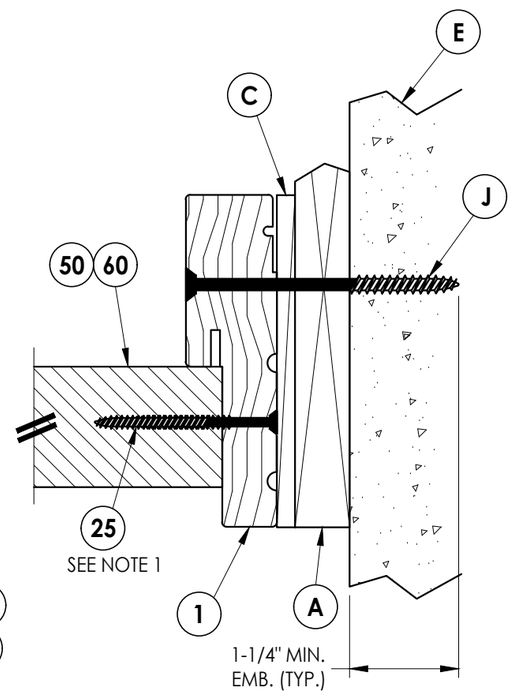

2/7 **HORIZONTAL CROSS SECTION**
Shown w/ 1X sub-buck
Outswing shown (Inswing similar)

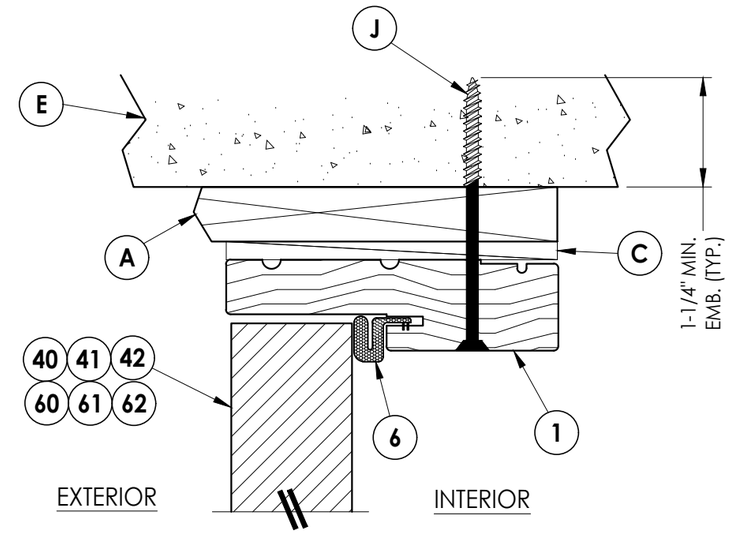

3/7 **VERTICAL CROSS SECTION**
Shown w/ 1X sub-buck
Outswing shown (Inswing similar)

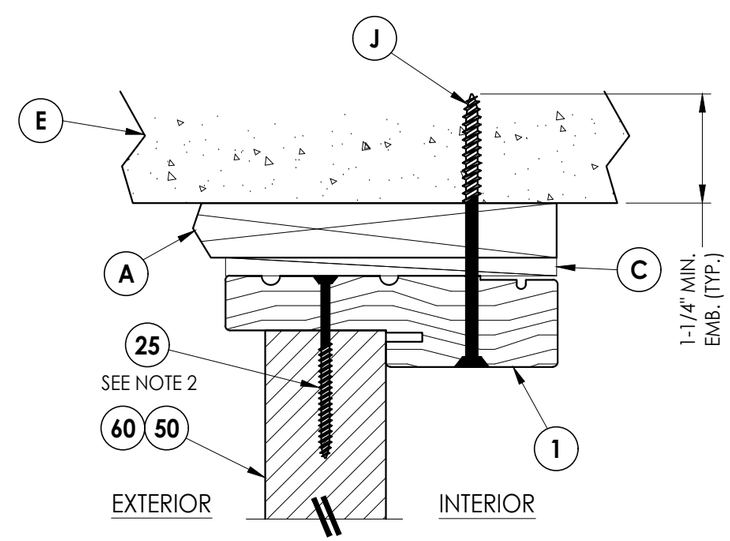

4/7 **VERTICAL CROSS SECTION**
Shown w/ 1X sub-buck
Outswing shown (Inswing similar)

Documents Prepared By:
Lyndon F. Schmidt
P.E. No. 43409
RW BUILDING CONSULTANTS, INC.
P.O. Box 230, Valrico, FL 33595
Phone No.: 813.659.9197
FBPE Registry No. 9813

PRODUCT: THERMA-TRU STEEL DOOR

PART OR ASSEMBLY: HORIZONTAL & VERTICAL CROSS SECTIONS (1X BUCK)

NO.	DATE	REVISIONS	BY
2	8/07/23	UPDATE TO 8TH ED. (2023) FBC	LFS
1	7/14/20	UPDATE TO 7TH ED (2020) FBC	LFS

DATE: 10/12/17
SCALE: N.T.S.
DWG. BY: JK
CHK. BY: LFS
DRAWING NO.: FL-21131.9
SHEET 7 OF 14

© 2017 R.W. Building Consultants Inc.

Z:\2023 FBC Drawings\Therma-Tru\FL-21131 R2\FL-21131.7-9.dwg

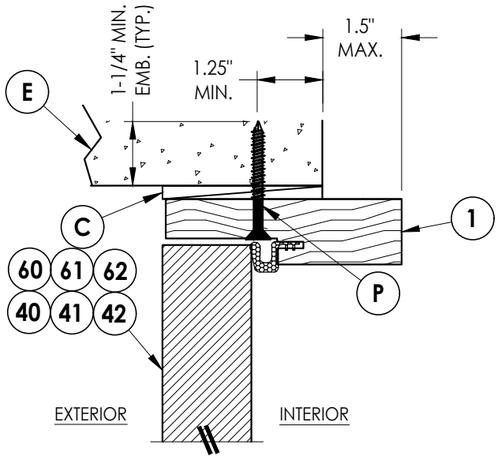

3/8 VERTICAL CROSS SECTION
Shown Direct to Masonry
Outswing only w/ 4-9/16" jamb
Double Door Only (N/A w/ Sidelites)

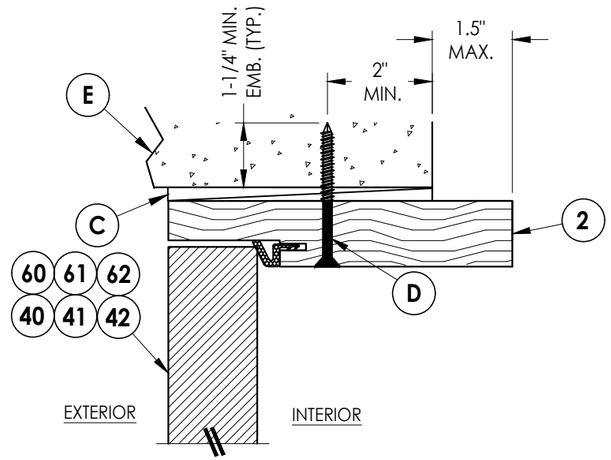

5/8 VERTICAL CROSS SECTION
Shown Direct to Masonry
Outswing only w/ 6-9/16" jamb

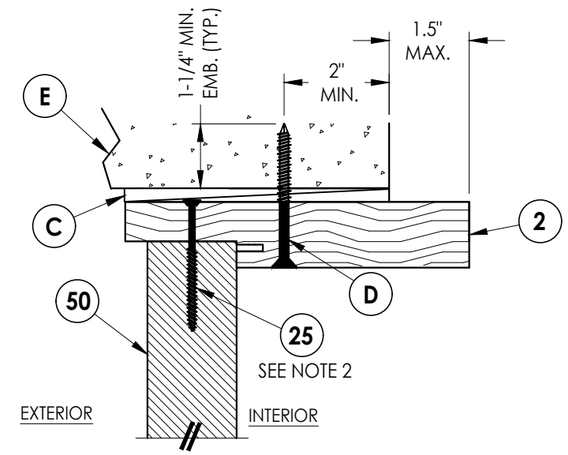

6/8 VERTICAL CROSS SECTION
Shown Direct to Masonry
Outswing only w/ 6-9/16" jamb

Notes:
1. Sidelite assembly screws located 7" from top and 14" from bottom & 2 more screws equally spaced between (4 screws total per side jamb).
2. Sidelite assembly screws located 3" from each end (2 screws along head jamb).

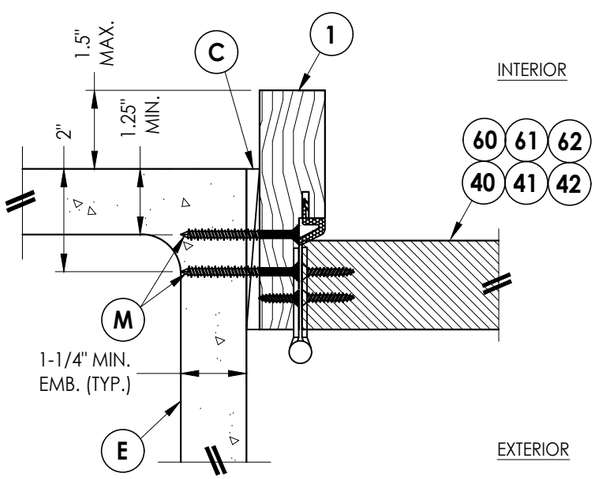

1/8 HORIZONTAL CROSS SECTION
Shown Direct to Masonry
Outswing only w/ 4-9/16" jamb
Double Door Only (N/A w/ Sidelites)

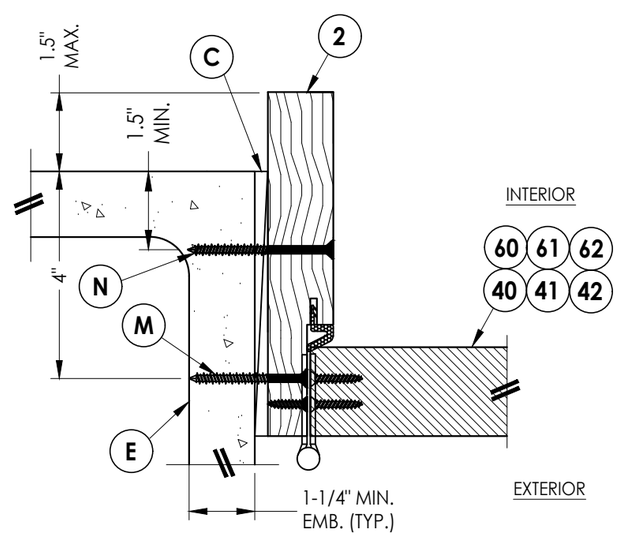

4/8 HORIZONTAL CROSS SECTION
Shown Direct to Masonry
Outswing only w/ 6-9/16" jamb

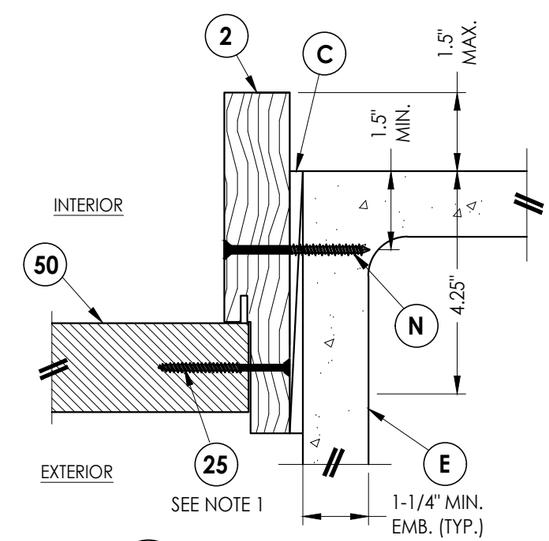

2/8 HORIZONTAL CROSS SECTION
Shown Direct to Masonry
Outswing only w/ 6-9/16" jamb

Documents Prepared By:
Lyndon F. Schmidt
P.E. No. 43409
R.W. BUILDING CONSULTANTS, INC.
P.O. Box 230, Valrico, FL 33595
Phone No.: 813.659.9197
FBPE Registry No. 9813

PRODUCT: THERMA-TRU STEEL DOOR

PART OR ASSEMBLY: HORIZONTAL & VERTICAL SECTIONS (DIRECT TO MASONRY)

REVISIONS

NO.	DATE	BY
2	8/07/23	UPDATE TO 8TH ED. (2023) FBC	LFS
1	7/14/20	UPDATE TO 7TH ED. (2020) FBC	LFS

DATE: 10/12/17
SCALE: N.T.S.
DWG. BY: JK
CHK. BY: LFS
DRAWING NO.: FL-21131.9
SHEET 8 OF 14

© 2017 R.W. Building Consultants Inc.

Z:\2023 FBC Drawings\Therma-Tru\FL-21131 R2\FL-21131.7-9.dwg

Notes:
1. Sill Item #'s 16, 32, 33, 36, 37, 38 & 39 are attached to jambs w/ (3) #8 X 2-1/2" pfh screws at each end.
   Sill Item #'s 17 & 18 are attached to jambs w/ (2) #8 X 2-1/2" pfh screws at each end.
   Sill Item #15 is attached to jambs utilizing (2) #10 X 2" pph screws at each end.
2. Sidelite assembly screws located 4" from each end (2 screws along sill).

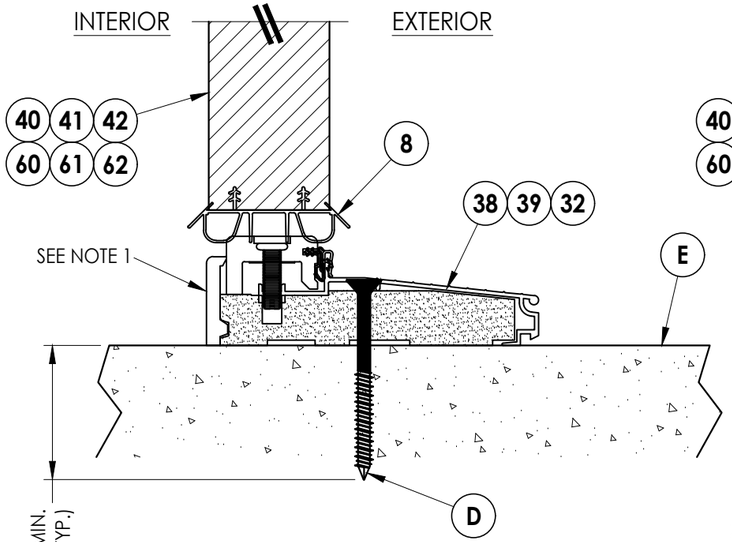

1/9 **VERTICAL CROSS SECTION**
Inswing Sill

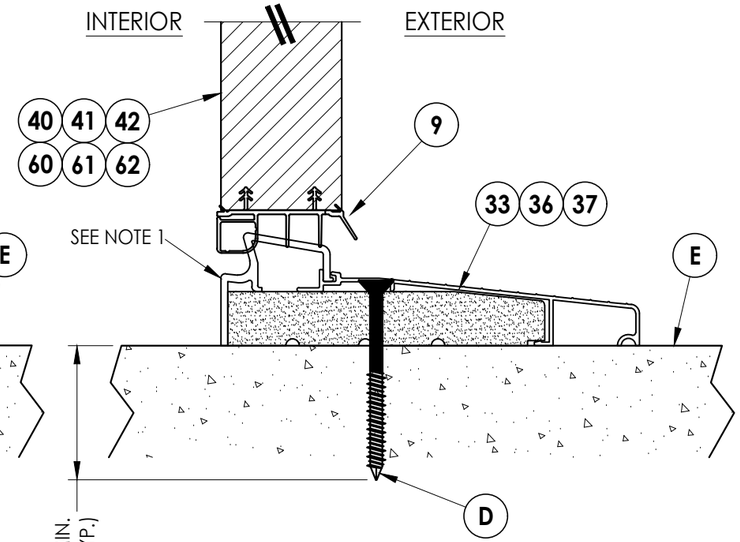

2/9 **VERTICAL CROSS SECTION**
Inswing Sill

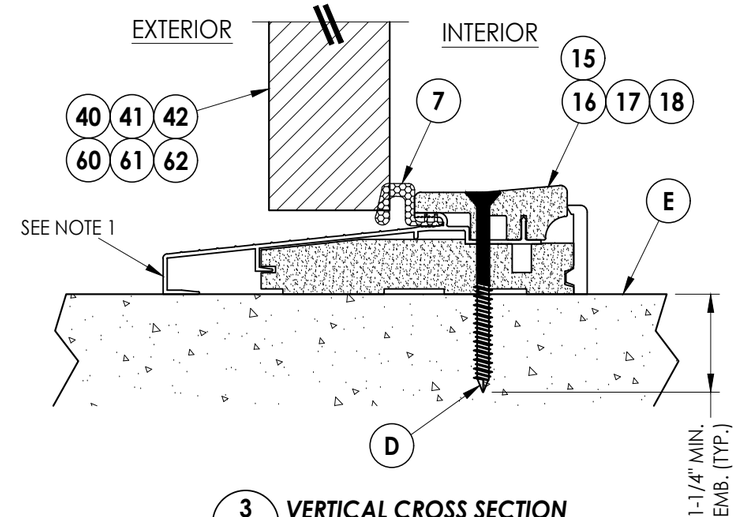

3/9 **VERTICAL CROSS SECTION**
Outswing Sill

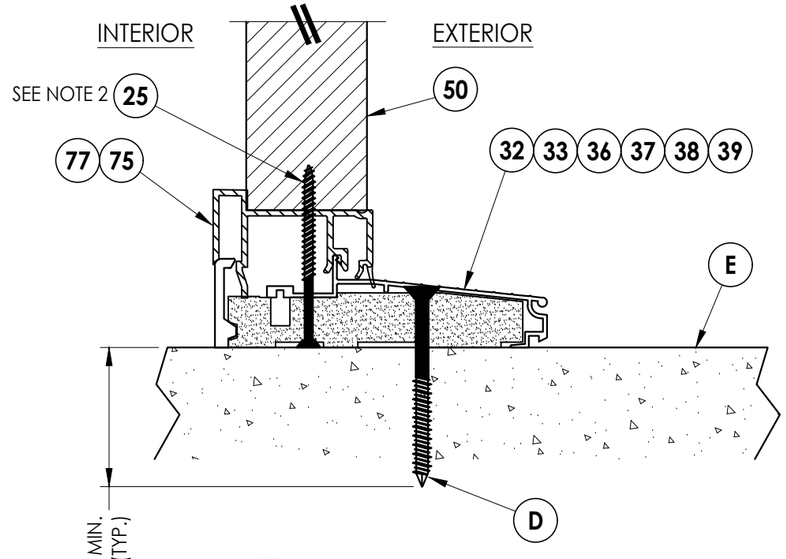

5/9 **VERTICAL CROSS SECTION**
Inswing Sill

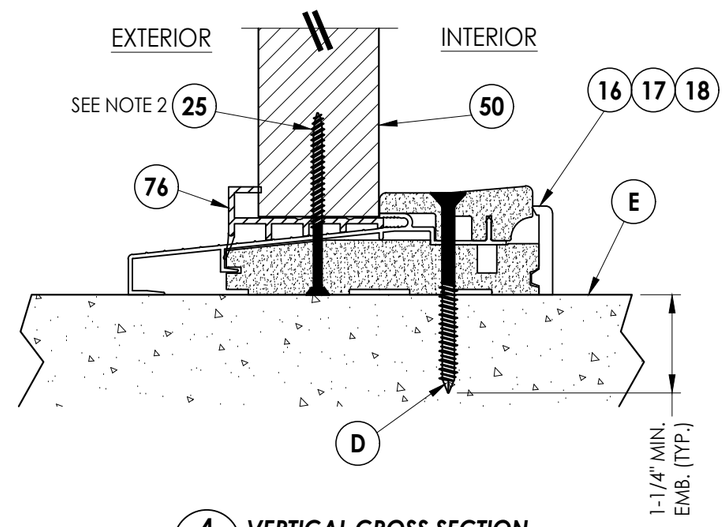

4/9 **VERTICAL CROSS SECTION**
Outswing Sill

Documents Prepared By:
Lyndon F. Schmidt
P.E. No. 43409
R.W. BUILDING CONSULTANTS, INC.
P.O. Box 230, Valrico, FL 33595
Phone No.: 813.659.9197
FBPE Registry No. 9813

PRODUCT: THERMA-TRU STEEL DOOR

PART OR ASSEMBLY: VERTICAL CROSS SECTIONS (THRESHOLDS)

REVISIONS

NO.	DATE		BY
2	8/07/23	UPDATE TO 8TH ED. (2023) FBC	LFS
1	7/14/20	UPDATE TO 7TH ED (2020) FBC	LFS

DATE: 10/12/17
SCALE: N.T.S.
DWG. BY: JK
CHK. BY: LFS
DRAWING NO.: FL-21131.9
SHEET 9 OF 14

© 2017 R.W. Building Consultants Inc.

Z:\2023 FBC Drawings\Therma-Tru\FL-21131 R2\FL-21131.7-9.dwg

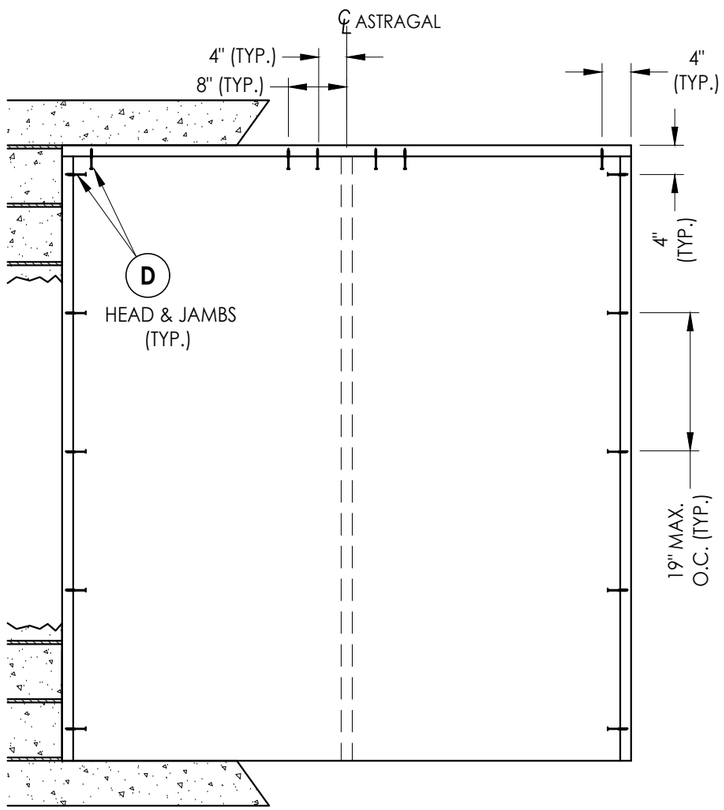

XX

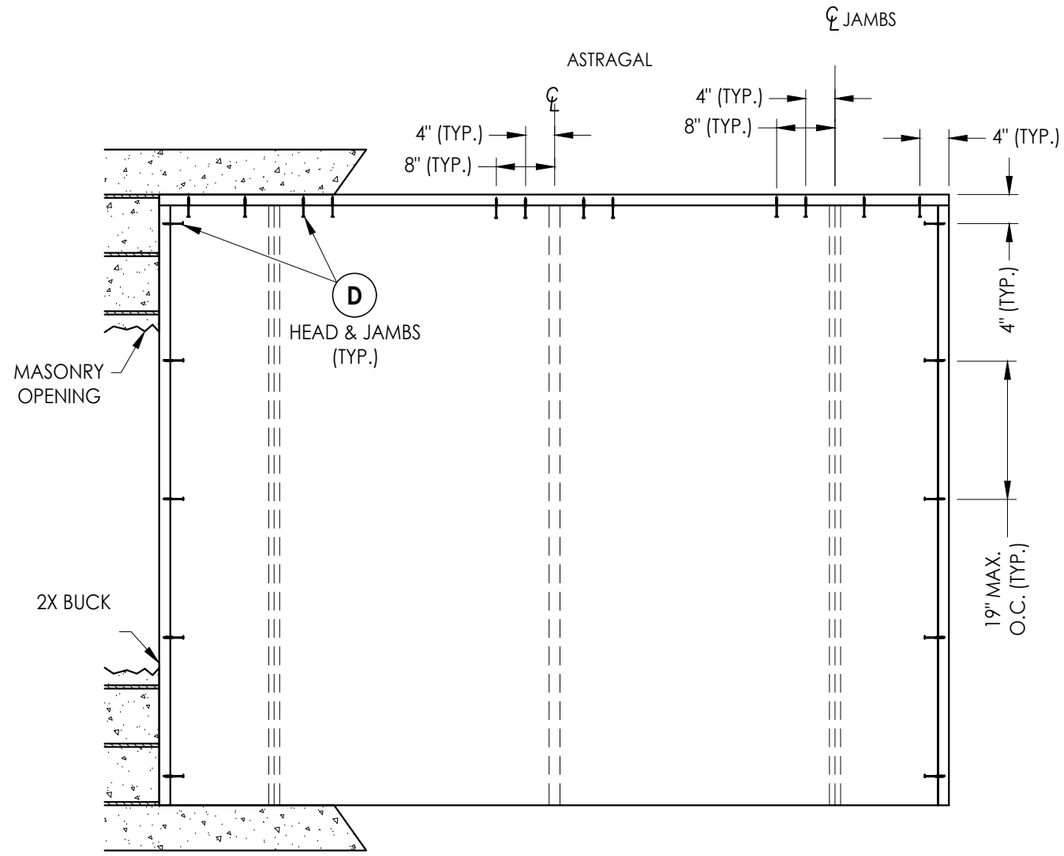

OXXO

2X BUCK ANCHORING

Documents Prepared By:
Lyndon F. Schmidt
P.E. No. 43409

RW BUILDING CONSULTANTS, INC.
P.O. Box 230, Valrico, FL 33595
Phone No.: 813.659.9197
FBPE Registry No. 9813

PRODUCT: THERMA-TRU STEEL DOOR

PART OR ASSEMBLY: BUCK ANCHORING

REVISIONS

NO.	DATE	BY
2	8/07/23 UPDATE TO 8TH ED. (2023) FBC	LFS
1	7/14/20 UPDATE TO 7TH ED (2020) FBC	LFS

DATE: 10/12/17
SCALE: N.T.S.
DWG. BY: JK
CHK. BY: LFS
DRAWING NO.: FL-21131.9
SHEET 10 OF 14

© 2017 R.W. Building Consultants Inc.

Z:\2023 FBC Drawings\Therma-Tru\FL-21131 R2\FL-21131.7-9.dwg

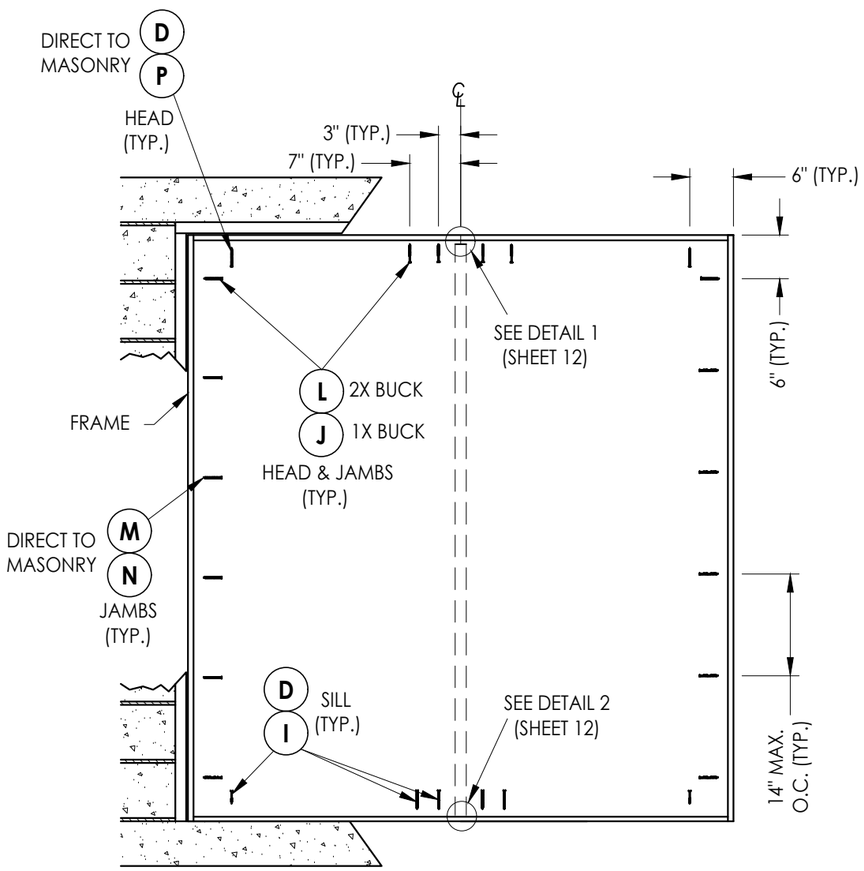

XX

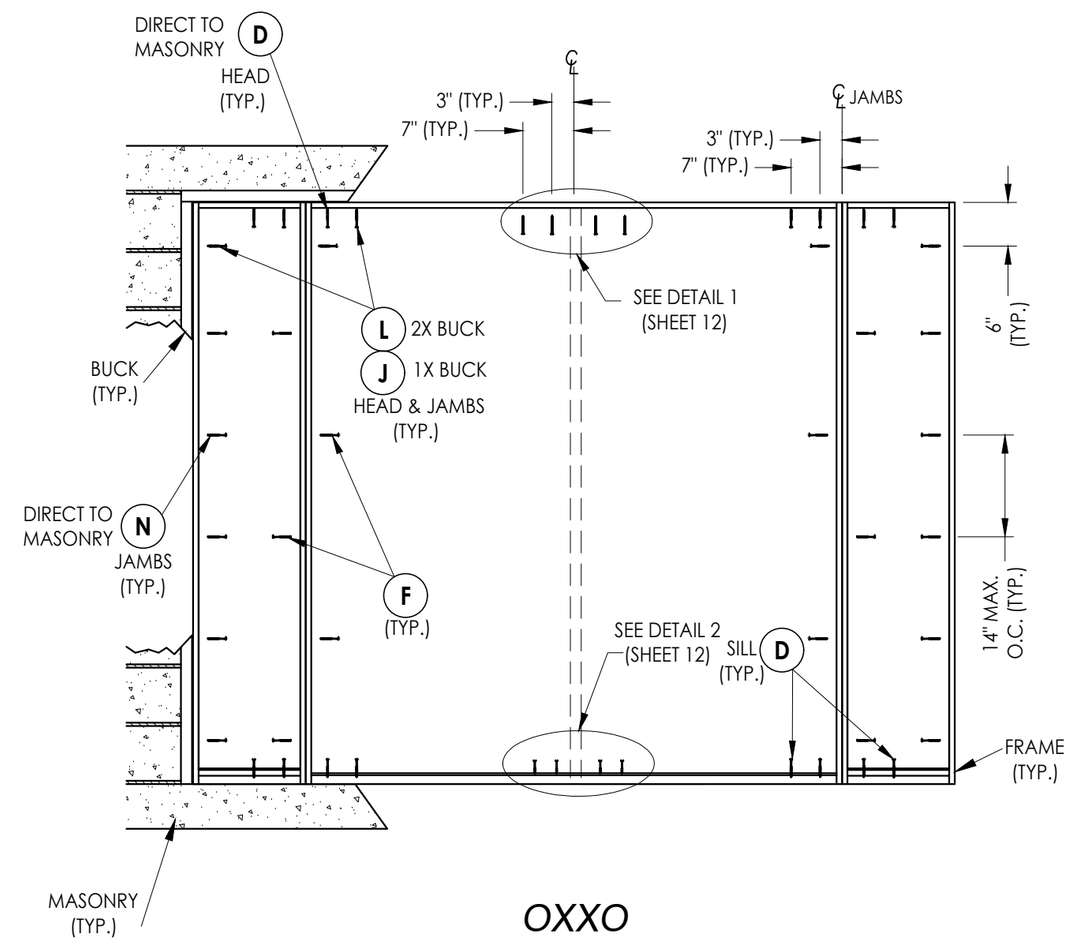

OXXO

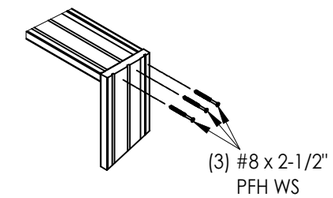

JAMB TO HEAD DETAIL (TYP.)

FRAME ANCHORING

Z:\2023 FBC Drawings\Therma-Tru\FL-21131 R2\FL-21131.7-9.dwg

Documents Prepared By:
Lyndon F. Schmidt
P.E. No. 43409

RW BUILDING CONSULTANTS, INC.
P.O. Box 230, Valrico, FL 33595
Phone No.: 813.659.9197
FBPE Registry No. 9813

PRODUCT: THERMA-TRU STEEL DOOR

PART OR ASSEMBLY: FRAME ANCHORING

NO.	DATE	REVISIONS	BY
2	8/07/23	UPDATE TO 8TH ED. (2023) FBC	LFS
1	7/14/20	UPDATE TO 7TH ED. (2020) FBC	LFS

DATE: 10/12/17
SCALE: N.T.S.
DWG. BY: JK
CHK. BY: LFS
DRAWING NO.: FL-21131.9
SHEET 11 OF 14

© 2017 R.W. Building Consultants Inc.

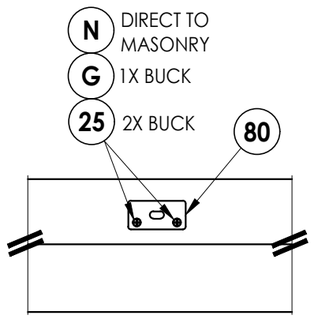

DETAIL 1
Coastal Astragal Strike Plate @ Head

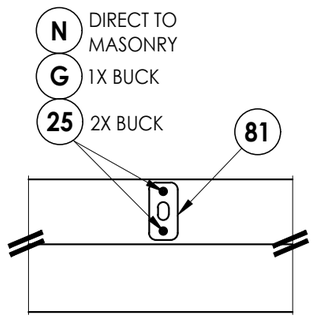

DETAIL 1
Standard Astragal Strike Plate @ Head

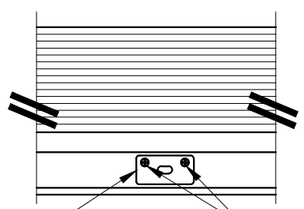

DETAIL 2
Inswing
Coastal Astragal Strike Plate @ Sill

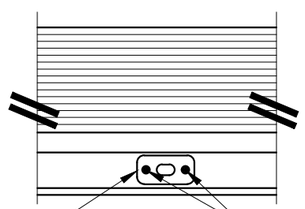

DETAIL 2
Inswing
Standard Astragal Strike Plate @ Sill

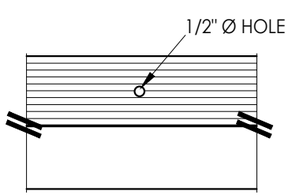

DETAIL 2
Outswing
Astragal Bolt Hole @ Sill

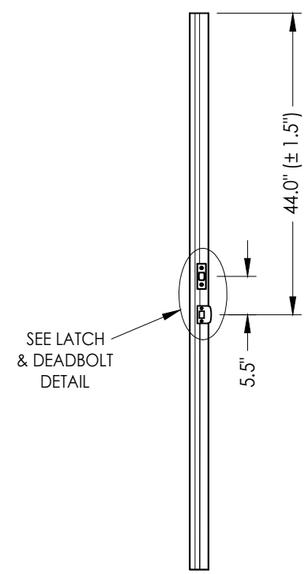

ASTRAGAL
Latch and Deadbolt

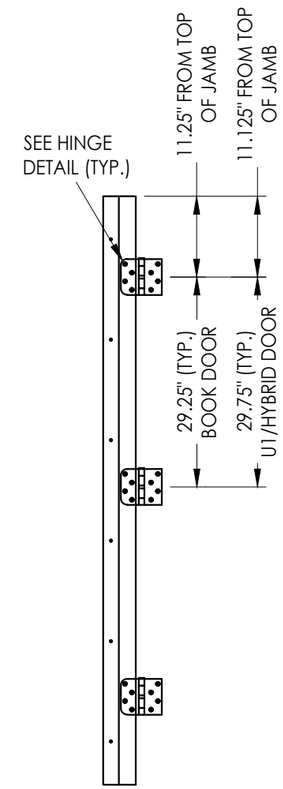

HINGE JAMB

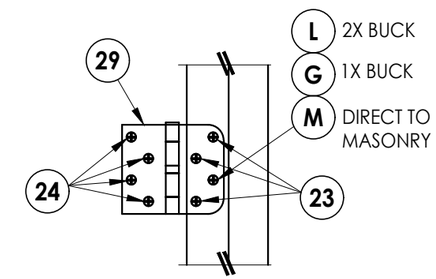

HINGE DETAIL

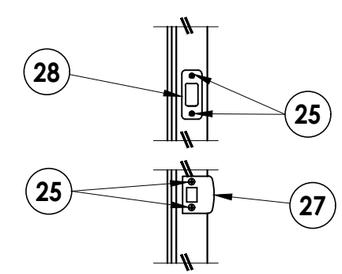

LATCH & DEADBOLT DETAIL
Schlage / Kwikset

Documents Prepared By:
Lyndon F. Schmidt
P.E. No. 43409

RW BUILDING CONSULTANTS, INC.
P.O. Box 230, Valrico, FL 33595
Phone No.: 813.659.9197
FBPE Registry No. 9813

PRODUCT: THERMA-TRU STEEL DOOR

PART OR ASSEMBLY: HARDWARE DETAILS

NO.	DATE	BY	REVISIONS
2	8/07/23	LFS	UPDATE TO 8TH ED. (2023) FBC
1	7/14/20	LFS	UPDATE TO 7TH ED (2020) FBC

DATE: 10/12/17
SCALE: N.T.S.
DWG. BY: JK
CHK. BY: LFS
DRAWING NO.: FL-21131.9
SHEET 12 OF 14

© 2017 R.W. Building Consultants Inc.

Z:\2023 FBC Drawings\Therma-Tru\FL-21131 R2\FL-21131.7-9.dwg

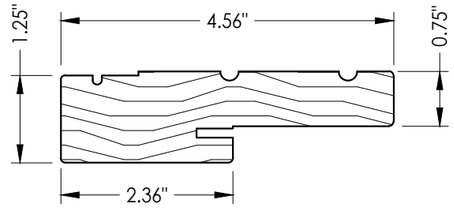

1 WOOD JAMB

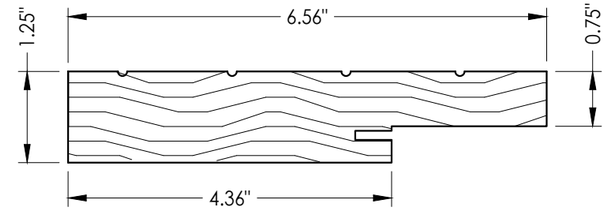

2 WOOD JAMB

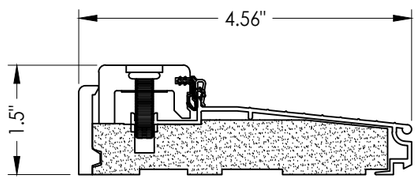

38 INSWING THRESHOLD
Inswing Composite Adjustable Sill

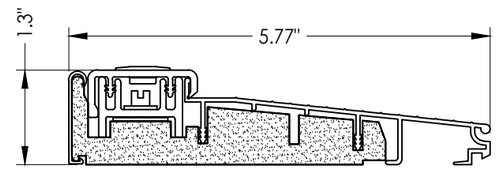

39 INSWING THRESHOLD
Inswing Basic Composite Adjustable Sill

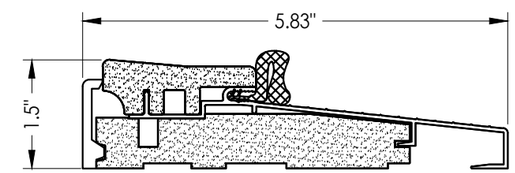

16 OUTSWING THRESHOLD
Composite Sill

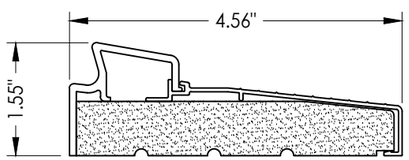

33 INSWING THRESHOLD
Inswing Basic Fixed Sill

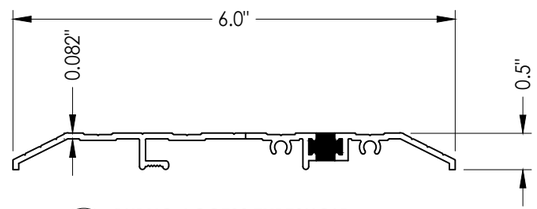

15 PUBLIC ACCESS THRESHOLD

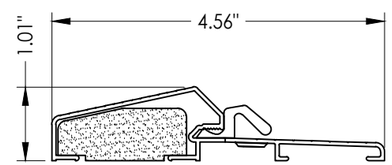

17 OUTSWING THRESHOLD
Composite / Aluminum Sill

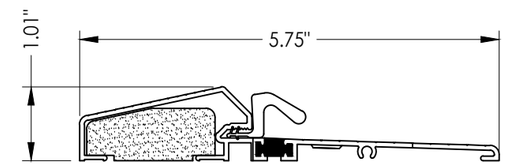

18 OUTSWING THRESHOLD
Composite / Aluminum Sill
(Thermal Break)

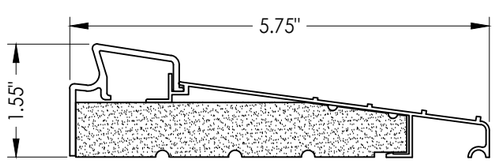

36 INSWING THRESHOLD
Inswing Basic Fixed 5-3/4" Sill

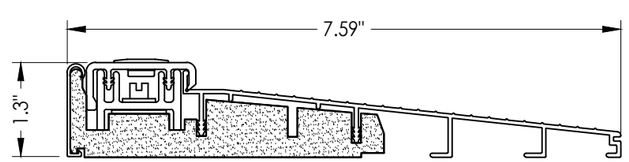

32 INSWING THRESHOLD
Inswing Basic Composite Adjustable Sill 7-1/2"

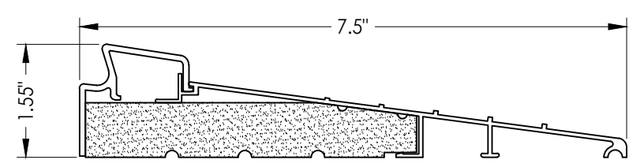

37 INSWING THRESHOLD
Inswing Basic Fixed 7-1/2" Sill

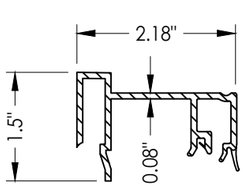

75 SIDELITE SPACER
Inswing

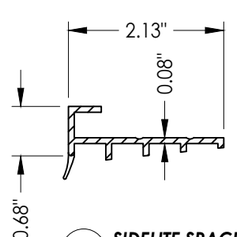

76 SIDELITE SPACER
Outswing

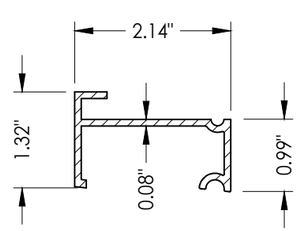

77 SIDELITE SPACER
Inswing

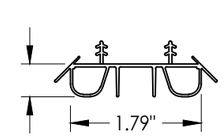

8 SWEEP

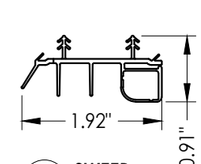

9 SWEEP

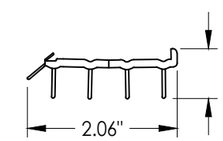

10 SWEEP

Documents Prepared By:
Lyndon F. Schmidt
P.E. No. 43409
R.W. BUILDING CONSULTANTS, INC.
P.O. Box 230, Valrico, FL 33595
Phone No.: 813.659.9197
FBPE Registry No. 9813

PRODUCT: THERMA-TRU STEEL DOOR

PART OR ASSEMBLY: COMPONENTS

NO.	DATE		BY
2	8/07/23	UPDATE TO 8TH ED. (2023) FBC	LFS
1	7/14/20	UPDATE TO 7TH ED (2020) FBC	LFS

REVISIONS

DATE: 10/12/17
SCALE: N.T.S.
DWG. BY: JK
CHK. BY: LFS
DRAWING NO.: FL-21131.9
SHEET 13 OF 14

© 2017 R.W. Building Consultants Inc.

Z:\2023 FBC Drawings\Therma-Tru\FL-21131 R2\FL-21131.7-9.dwg

BILL OF MATERIALS

ITEM #	DESCRIPTION	MATERIAL
A	1X BUCK (SG >= 0.42)	WOOD
B	2X BUCK (SG >= 0.42)	WOOD
C	1/4" MAX. SHIM SPACE	-
D	1/4" X 2-3/4" PFH DeWALT OR ITW CONCRETE SCREW	STEEL
E	MASONRY - 3,000 PSI MIN. CONCRETE CONFORMING TO ACI 301 OR HOLLOW BLOCK CONFORMING TO ASTM C90	CONCRETE
F	#10 X 2" PFH WOOD SCREW	STEEL
G	3/16" X 3-1/4" ITW CONCRETE SCREW	STEEL
I	1/4" X 1-3/4" PFH DeWALT OR ITW CONCRETE SCREW	STEEL
J	1/4" X 3-3/4" PFH DeWALT OR ITW CONCRETE SCREW	STEEL
L	#10 X 2-1/2" PFH WOOD SCREW (1.15" MIN. EMBEDMENT)	STEEL
N	3/16" X 2-3/4" ITW CONCRETE SCREW	STEEL
1	JAMB (FINGER JOINT PINE)	WOOD
2	JAMB (FINGER JOINT PINE)	WOOD
6	WEATHERSTRIP (MEDIUM REACH)	FOAM
7	WEATHERSTRIP (LONG REACH)	FOAM
8	SWEEP	VINYL
9	SWEEP (USE w/ MODERATE CLIMATE THRESHOLD)	VINYL
10	SWEEP (USE w/ PUBLIC ACCESS THRESHOLD)	VINYL
11	#8-10 X 1-1/2" PLASCREW	STEEL
12	#6-18 X 1-3/4" PFH SCREW	STEEL
15	PUBLIC ACCESS THRESHOLD	ALUM
16	OUTSWING THRESHOLD	ALUM/COMP
17	OUTSWING THRESHOLD	ALUM/COMP
18	OUTSWING THRESHOLD	ALUM/COMP
22	#8 x 3/4" PFH WOOD SCREW	STEEL
23	#10 x 3/4" PFH WOOD SCREW	STEEL
24	#10 x 1" PFH WOOD SCREW	STEEL

BILL OF MATERIALS

ITEM #	DESCRIPTION	MATERIAL
25	#8 x 2-1/2" PFH WOOD SCREW	STEEL
26	#8 x 5/8" PFH WOOD SCREW	STEEL
27	LATCH STRIKE PLATE	STEEL
28	DEADBOLT STRIKE PLATE	STEEL
28A	DEADBOLT SUB STRIKE PLATE	STEEL
29	4" X 4" HINGE	STEEL
32	INSWING THRESHOLD	ALUM/COMP
33	INSWING THRESHOLD	ALUM/COMP
36	INSWING THRESHOLD	ALUM/COMP
37	INSWING THRESHOLD	ALUM/COMP
38	INSWING THRESHOLD	ALUM/COMP
39	INSWING THRESHOLD	ALUM/COMP
40	DOOR PANEL (BOOK) - "PROFILES" SERIES	-
41	DOOR PANEL (HYBRID) - "PROFILES" SERIES	-
42	DOOR PANEL (U1) - "PROFILES" SERIES	-
50	SIDELITE (FULL LITE)	-
60	DOOR PANEL (BOOK) - "TRADITIONS" SERIES	-
61	DOOR PANEL (HYBRID) - "TRADITIONS" SERIES	-
62	DOOR PANEL (U1) - "TRADITIONS" SERIES	-
75	SIDELITE SPACER (INSWING)	PVC
76	SIDELITE SPACER (OUTSWING)	PVC
77	SIDELITE SPACER (INSWING) - MODERATE CLIMATE SILL	PVC

CONCRETE ANCHOR NOTES:

1. *Concrete anchor locations at the corners may be adjusted to maintain the min. edge distance to mortar joints.*
2. *Concrete anchor locations noted as "MAX. ON CENTER" must be adjusted to maintain the min. edge distance to mortar joints, additional concrete anchors may be required to ensure the "MAX. ON CENTER" dimension are not exceeded.*
3. *Concrete anchor table:*

ANCHOR TYPE	ANCHOR SIZE	MIN. EMBEDMENT	MIN. CLEARANCE TO MASONRY EDGE	MIN. CLEARANCE TO ADJACENT ANCHOR
ITW TAPCON®	1/4"	1-1/4"	2"	4"
DeWALT ULTRACON+®	1/4"	1-1/4"	1"	4"
ITW TAPCON®	3/16"	1-1/4"	AS SHOWN	1-1/2"

WOOD SCREW INSTALLATION NOTES:

1. *Maintain a minimum 5/8" edge distance, 1" end distance, & 1" o.c. spacing of wood screws to prevent the splitting of wood.*

Documents Prepared By:
Lyndon F. Schmidt
P.E. No. 43409
R.W. BUILDING CONSULTANTS, INC.
P.O. Box 230, Valrico, FL 33595
Phone No.: 813.659.9197
FBPE Registry No. 9813

PRODUCT: THERMA-TRU STEEL DOOR

PART OR ASSEMBLY: BILL OF MATERIALS

NO.	DATE	BY
2	8/07/23 UPDATE TO 8TH ED. (2023) FBC	LFS
1	7/14/20 UPDATE TO 7TH ED (2020) FBC	LFS

REVISIONS

DATE: 10/12/17
SCALE: N.T.S.
DWG. BY: JK
CHK. BY: LFS
DRAWING NO.: FL-21131.9
SHEET 14 OF 14

© 2017 R.W. BUILDING CONSULTANTS INC.

Z:\2023 FBC Drawings\Therma-Tru\FL-21131 R2\FL-21131.7-9.dwg